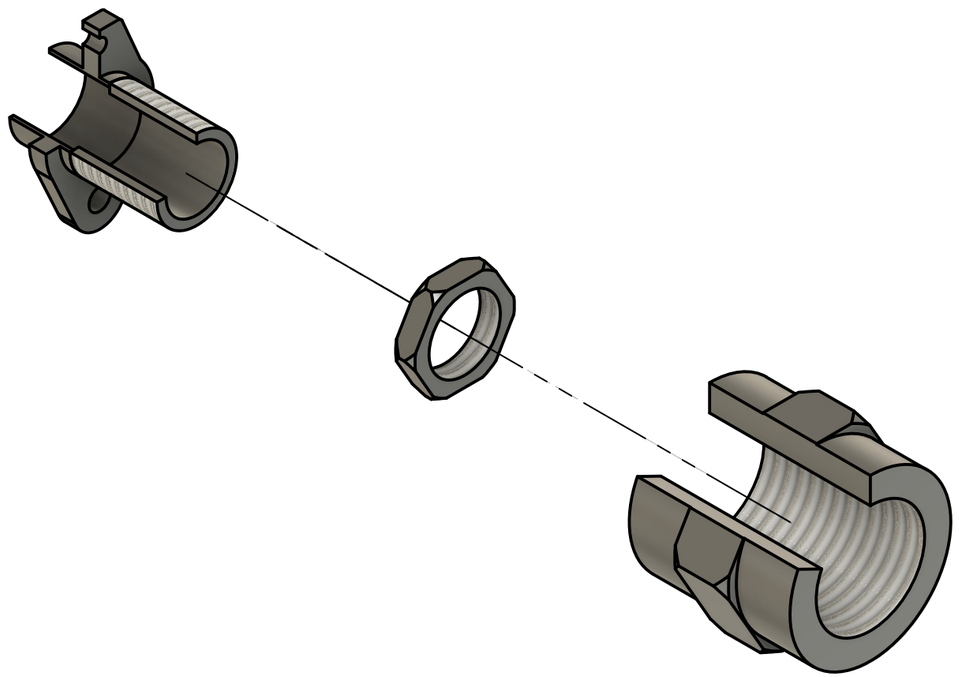

	PROJECT CAD Engineering				
	TITLE Final				
APPROVED	SIZE B	CODE	DWG NO		REV
CHECKED					
DRAWN Nikhil Arun 2/28/2026	SCALE 1:2		WEIGHT		SHEET 1/4

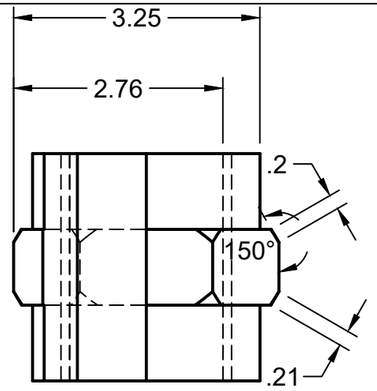

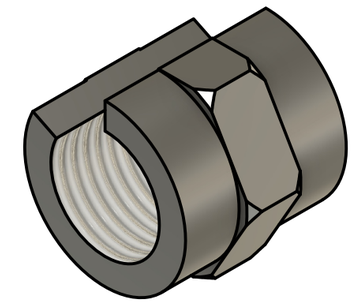

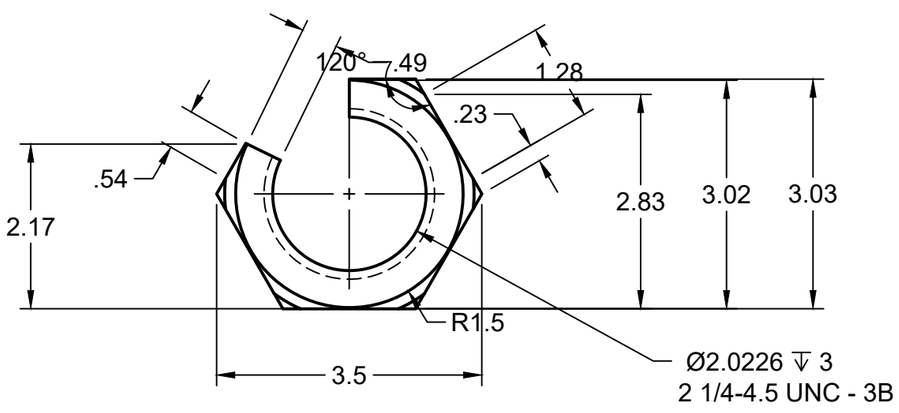

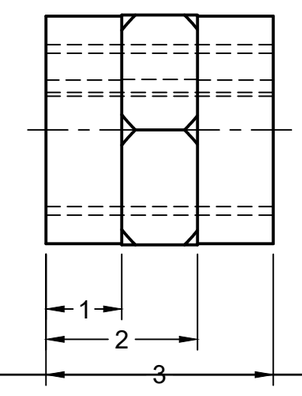

	PROJECT Packing Nut			
	TITLE Final			
APPROVED	SIZE	CODE	DWG NO	REV
CHECKED	B			
DRAWN Nikhil Arun 2/28/2026	SCALE 1:2 (From parent)	WEIGHT		SHEET 2/4

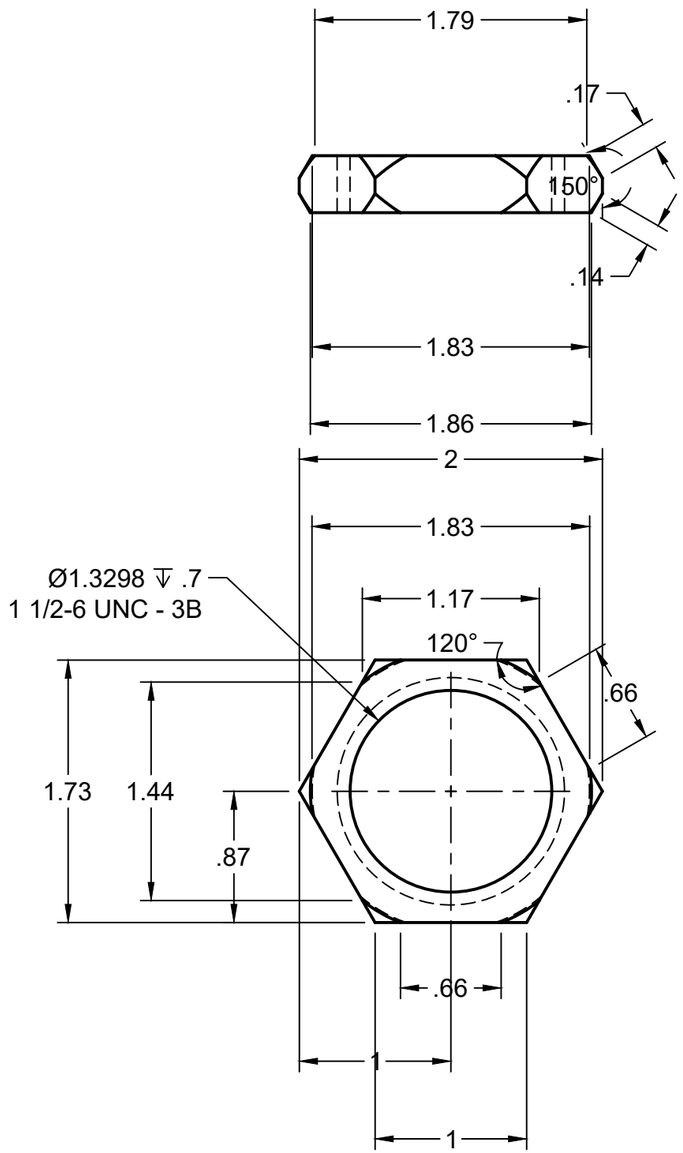

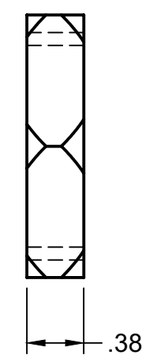

	PROJECT Lock Nut			
	TITLE Final			
APPROVED	SIZE B	CODE	DWG NO	REV
CHECKED				
DRAWN Nikhil Arun 2/28/2026	SCALE 1:1 (From parent)	WEIGHT		SHEET 3/4

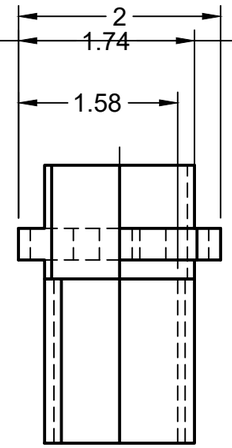

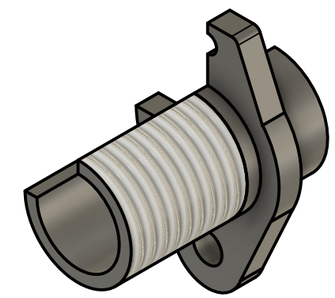

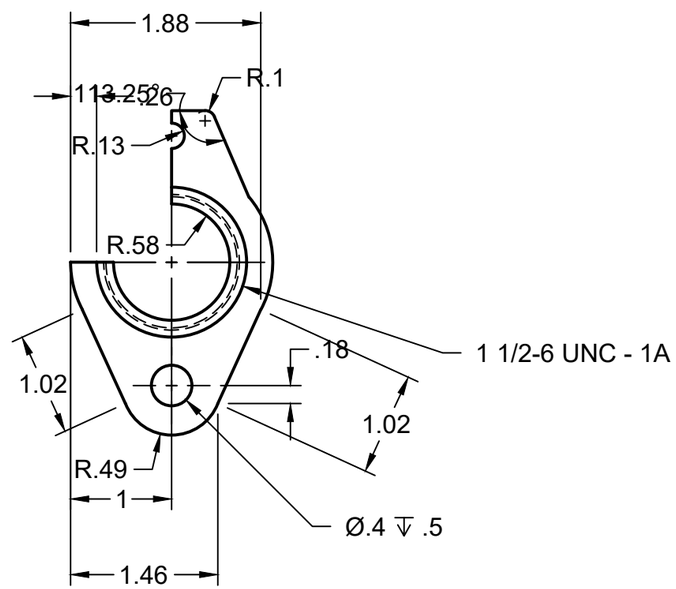

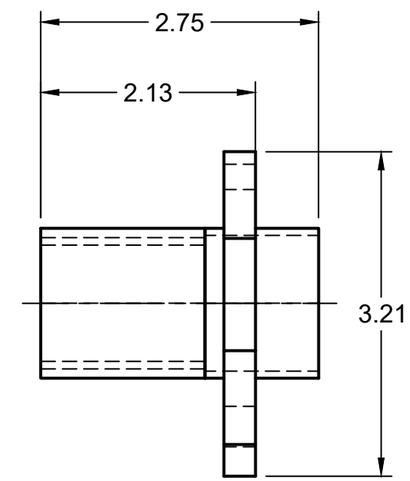

	PROJECT Bearing Brass			
	TITLE Final			
APPROVED	SIZE	CODE	DWG NO	REV
CHECKED	B			
DRAWN Nikhil Arun 2/28/2026	SCALE 1:1.5 (From parent)	WEIGHT		SHEET 4/4